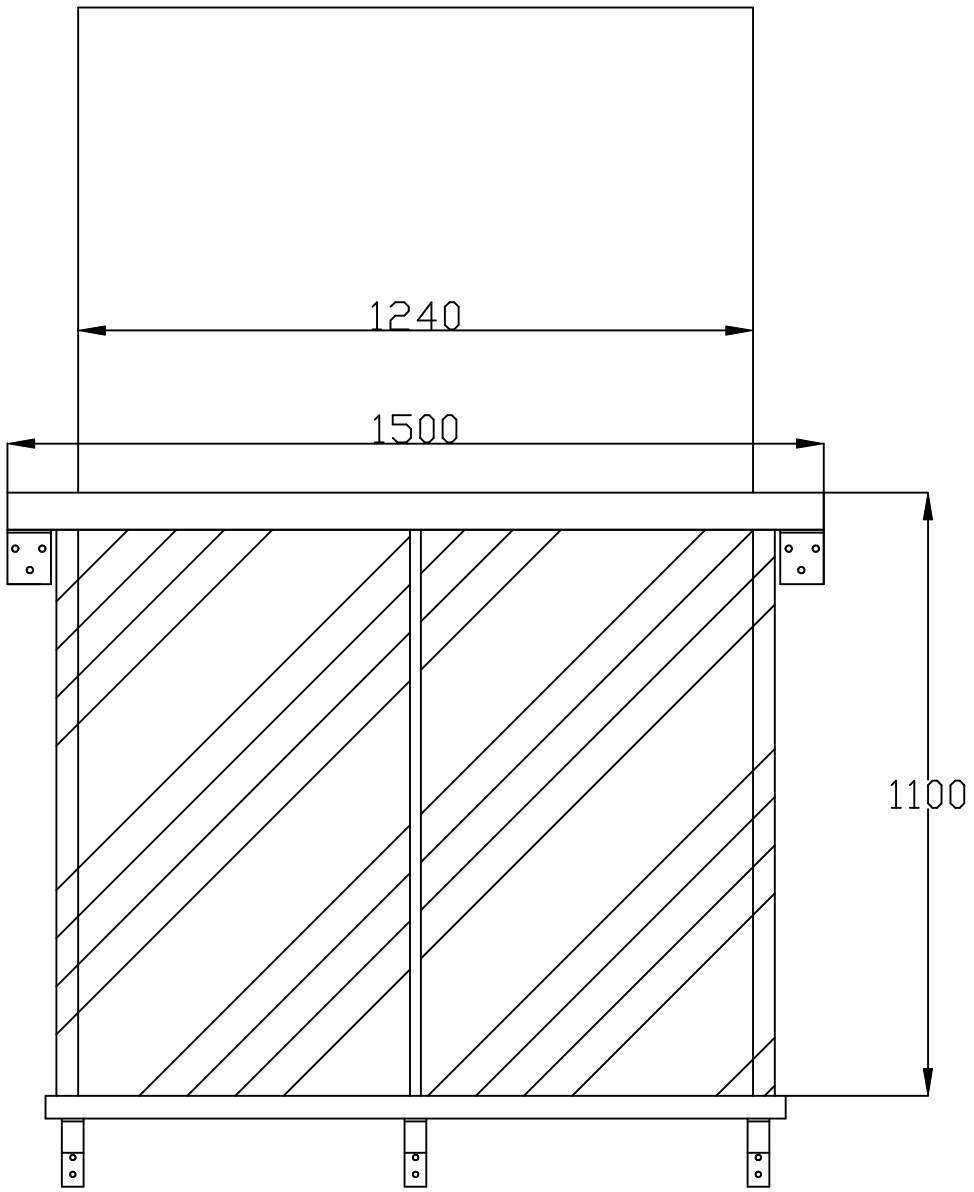Balconette (Bal150)